A3

Section A-A (Scale 1:10)

View along fall

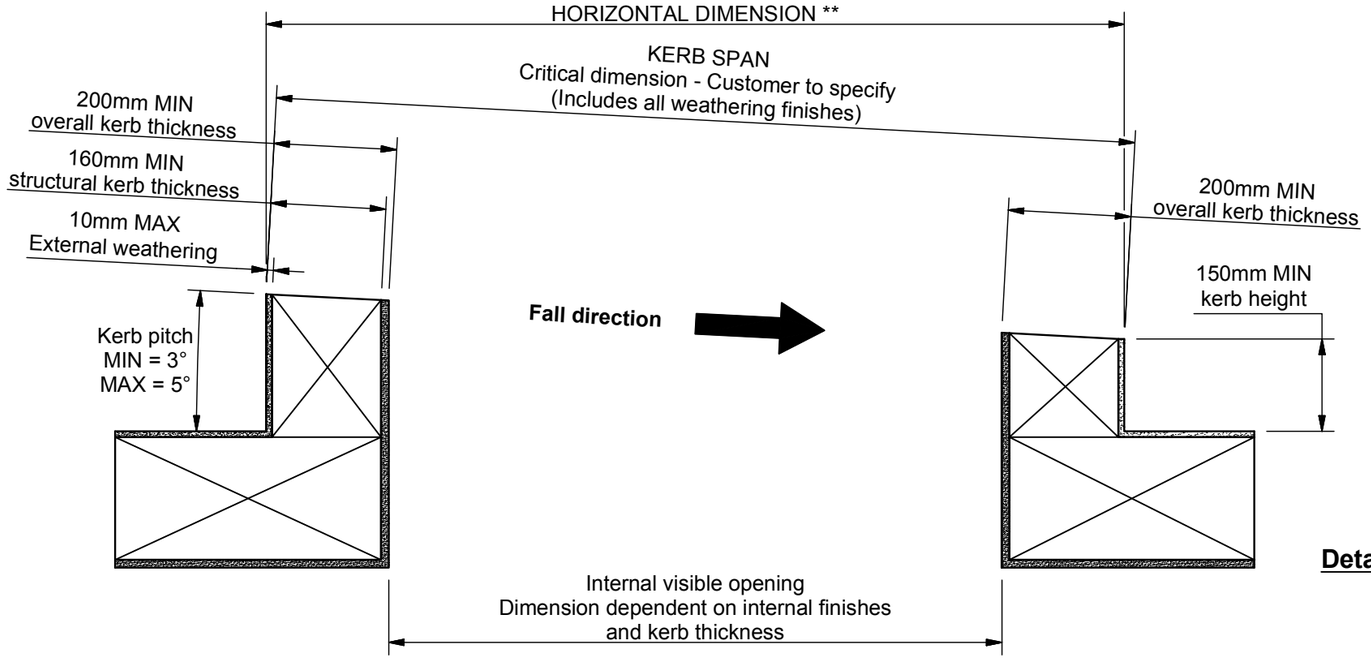

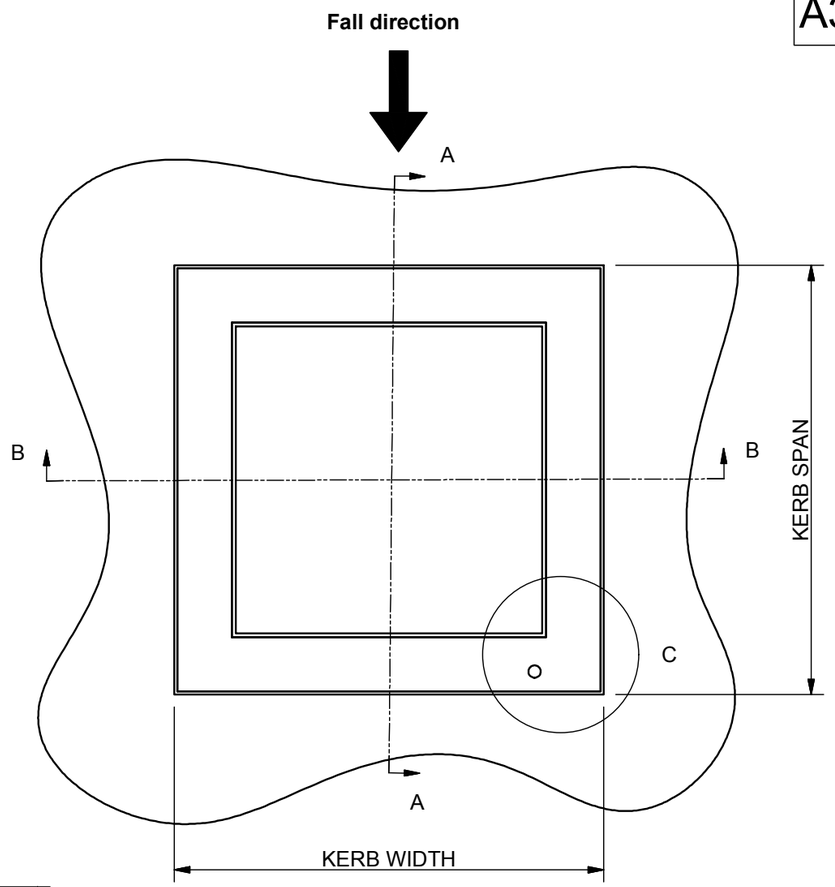

Detail C (Scale 1 : 10)

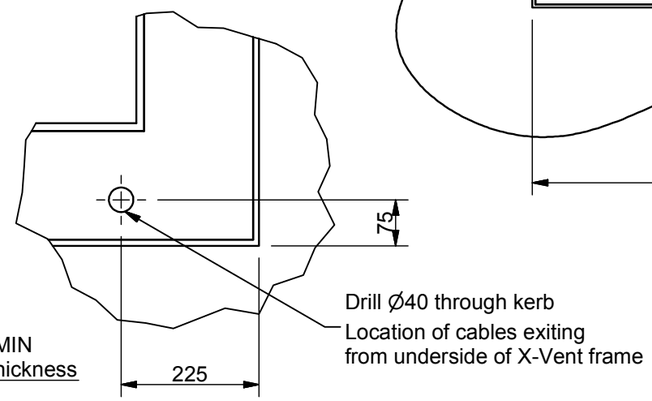

Section B-B (Scale 1:10)

View across fall

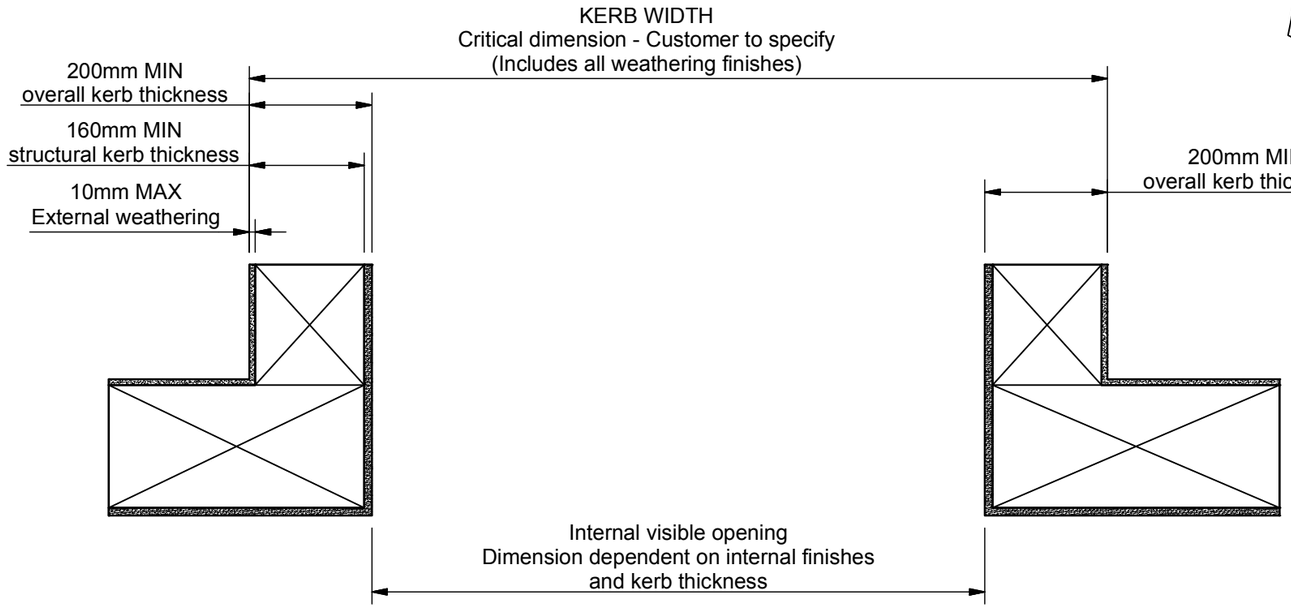

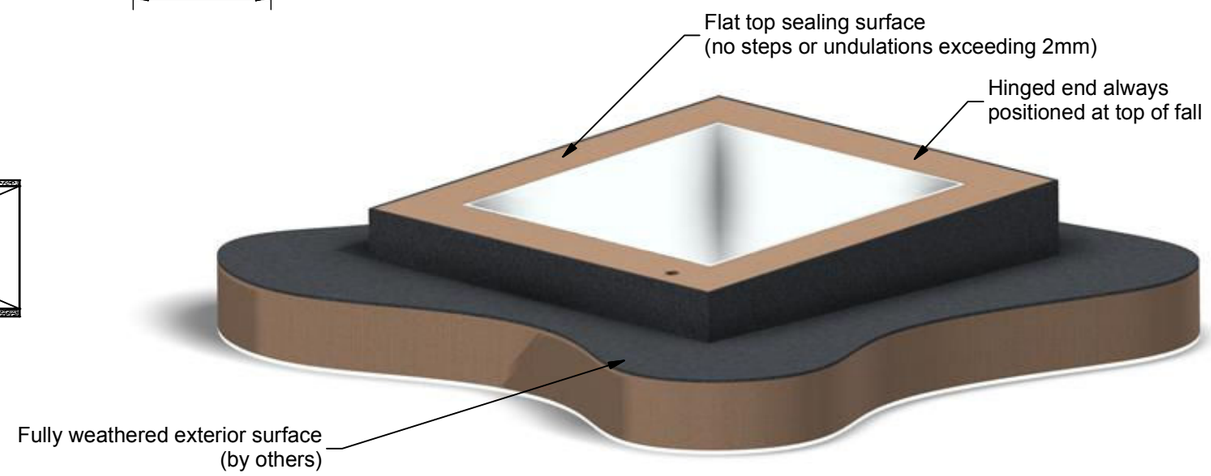

** Dimension calculated as:
SPAN x COSINE(PITCH°)
e.g. 2000cos(3) = 1997

GLAZING VISION

Saw Mills Road
Diss
Norfolk
IP22 4RG

Tel: +44 (0)333 8000 881
Fax: +44 (0)333 8000 882
Email: sales@glazingvision.co.uk
Website: www.glazingvision.co.uk

Third angle projection unless otherwise noted.
Tolerances:
Whole numbers = ±1mm
One decimal place = ±0.5mm
Two decimal places = ±0.2mm
All angles 90±0.5 degrees unless specified
IF IN DOUBT - ASK! DO NOT SCALE
Supplier to deburr & remove sharp corners

Rev	Revision Description	Drawn/ Date
-	Initial release	JWL 12.02.14

Product: 405 GV Standard X-Vent
Description: Kerb Detail
Materials: N/A
Finish: N/A
Weight: N/A
Quantity: N/A
Scale: 1:20 1:10
Drawn By: JWL
Drawn Date: 12.02.14
Checked By: PGW
Check Date: 12.02.14
Drawing No: 405-ASS-405