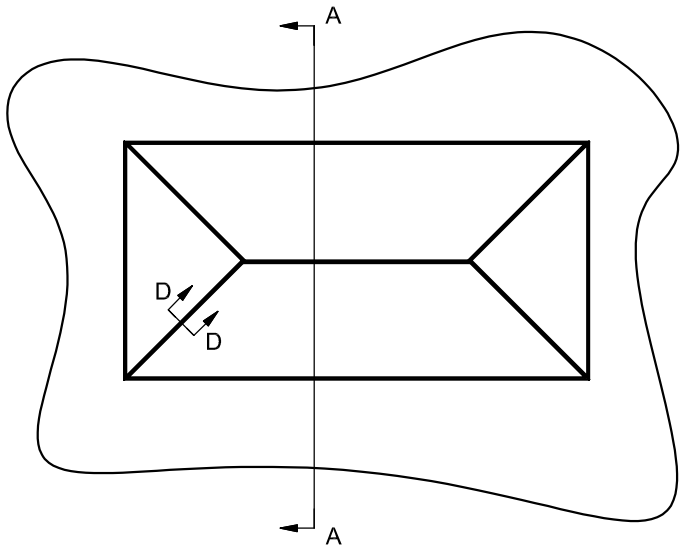


**Section D-D through corner join detail**

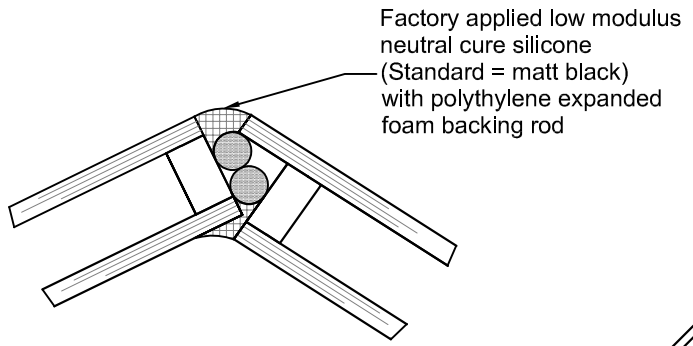


**Detail B**

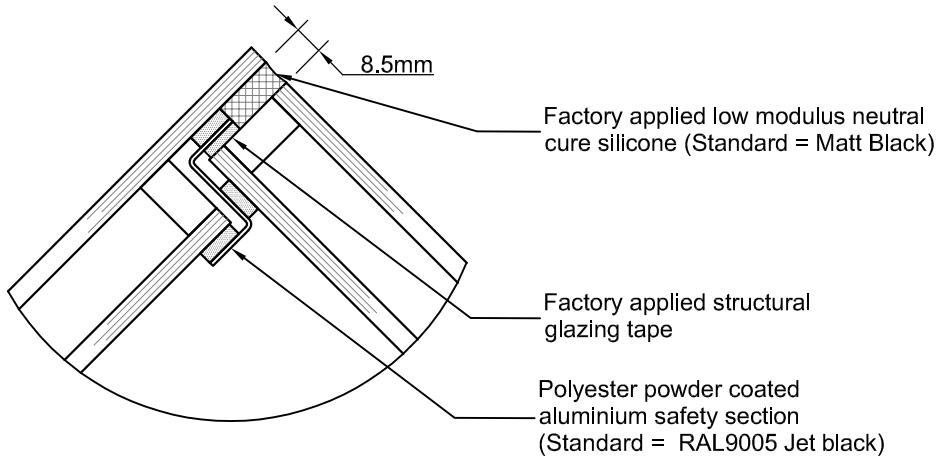


**Section A-A**

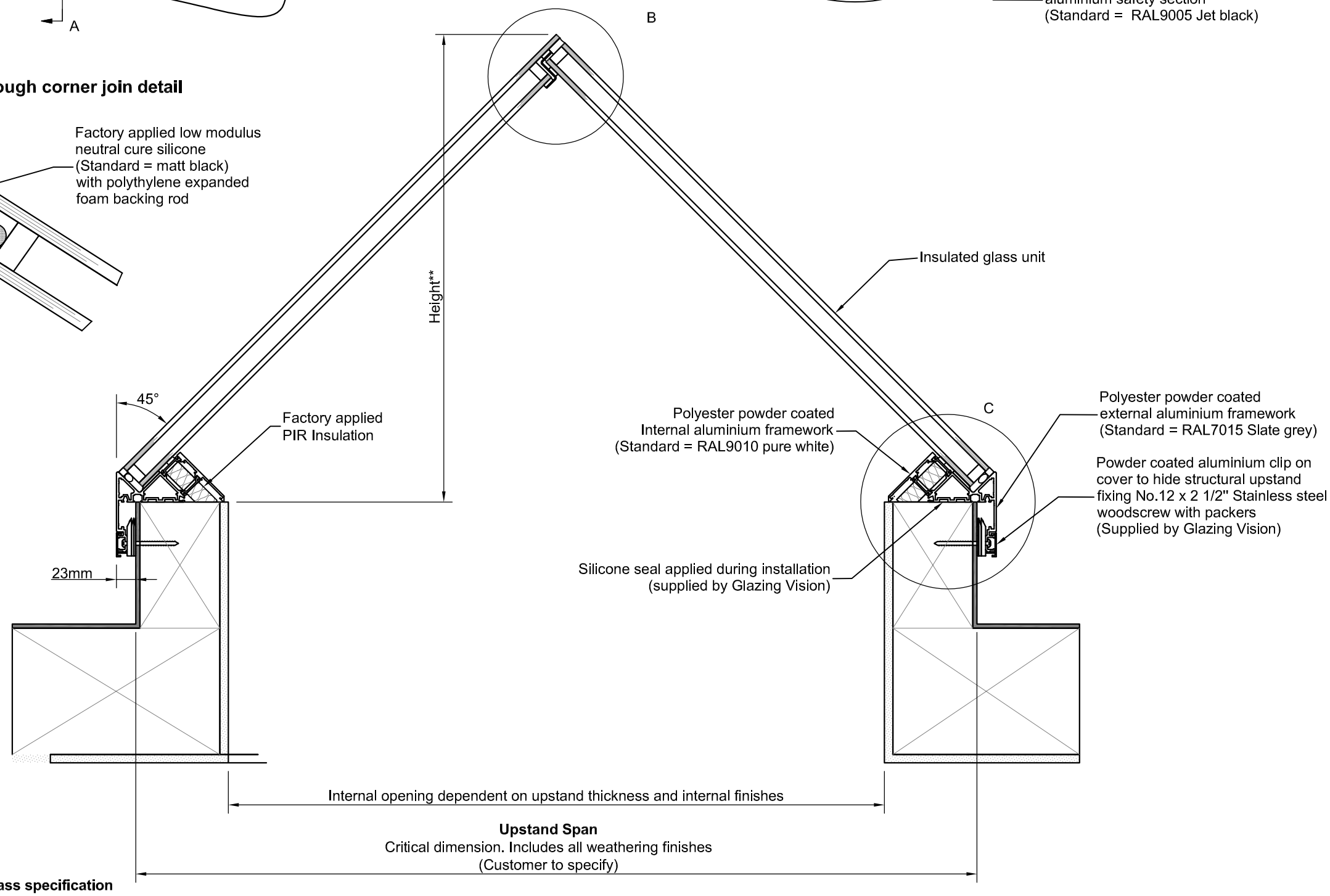


***Varies dependent on glass specification**
Double glazed unit with toughened inner shown, but other options are also available.
Check your quote/order confirmation for specific information on what's been specified in your product.

Detail C = 404-SDD-UK-008
**Height ≈ (SPAN/2) + 60mm

GLAZING VISION

☎: +44 (0)1379 658300
www.glazingvision.co.uk
✉: sales@glazingvision.co.uk

IT IS GLAZING VISION'S POLICY TO CONTINUOUSLY DEVELOP AND IMPROVE OUR PRODUCTS. WE THEREFORE RESERVE THE RIGHT TO MODIFY OR CHANGE THE DETAIL DESIGN AT OUR DISCRETION AND WITHOUT PRIOR NOTICE.

THIS DRAWING IS COPYRIGHT AND THE SOLE PROPERTY OF GLAZING VISION LTD. THE DESIGNS / INFORMATION IT CONTAINS ARE PRIVATE AND CONFIDENTIAL. IT MUST NOT BE COPIED, EXHIBITED OR COMMUNICATED TO THIRD PARTIES FOR ANY PURPOSE OTHER THAN THAT FOR WHICH IT WAS ISSUED WITHOUT THE WRITTEN PERMISSION OF GLAZING VISION LTD.

ALL DIMENSIONS IN **mm** UNLESS OTHERWISE STATED

UPSTAND TO BE CONSTRUCTED TO WITHIN **± 10 mm** ON STRAIGHT & **± 12 mm** ON DIAGONAL DESIGNED SIZES. WEATHERING BY OTHERS.

Third angle projection unless otherwise stated

THIS IS A STANDARD DRAWING, THE UNIT PURCHASED MAY VARY. THIS DRAWING DOES NOT INDICATE ACCURATE DIMENSIONS FOR ANY EXISTING STRUCTURAL COMPONENTS OR PRODUCTS.

DO NOT USE THIS DRAWING FOR ANY SITE LAYOUTS. ON-SITE PERSONNEL ARE RESPONSIBLE TO CONFIRM DRAWINGS VS SPECIFIC SITE CONDITIONS.

| ESTIMATED WEIGHT | SCALE |
|---|---|
| N/A | Not to scale (UNLESS OTHERWISE STATED) |

| REVISION | DESCRIPTION | NAME/DATE |
|---|---|---|
| - | Initial Release | TG 22/Dec/2020 |
| | | |
| | | |
| | | |

PROJECT: Pyramid and Lantern

TITLE / DESCRIPTION: Elongated Pyramid Section

CHECKED:

DRAWING NO.: 404-SDD-UK-006

SHEET: 1 OF 1